FPGA¿Í Serial PROM°úÀÇ ¿¬°á¹æ¹ý-4-

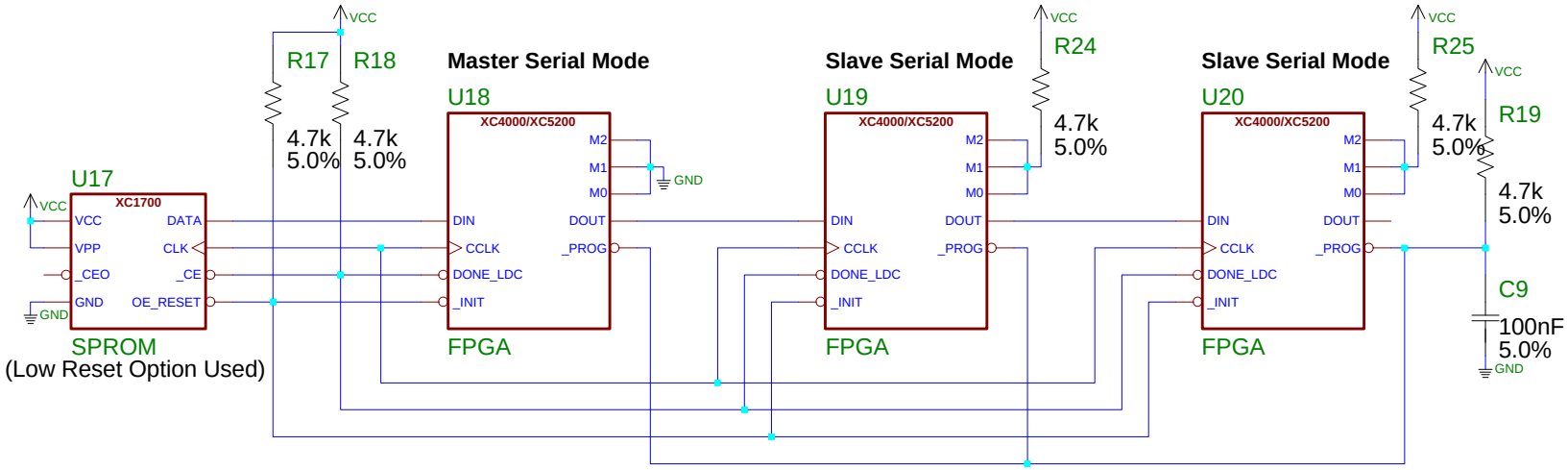

[Daisy Chain °á¼±µµ]

ÇÏ³ªÀÇ PROMÀ¸·Î ´Ù¼ö°³ÀÇ FPGA¸¦ ConfigurationÇÒ¶§ÀÇ °á¼±µµ

M0	M1	M2	
0	0	0	MASTER
1	1	1	SLAVE
1	1	1	X-Checker

===== Âü°í»çÇ× =====

* SPARTAN Device´Â Mode pinÀÌ ÇÏ³ªÀÌ¹Ç·Î M0, M1À° No Connection
* °¢DeviceÀÇ Pin nameÁß Underscore´Â Active LOW·Î µ¿ÀÛÇÔÀ» ³ªÅ¸³½´Ù
* DONE_LDC´Â DONE pin¶ç´Â /LDC pinÁß ÇÏ³ª¸¦ »ç¿ëÇÔÀ» ÀÇ¹ÌÇÔ
* XC1700 Serial PROMÀÇ RESET, OEÀÇ ±Ø¼°À° ROM Writer¿¡¼- ¼³Á¤ÇÑ´Ù
* ÀúÇ×À° 2K ~ 10K»çÀÌÀÇ °ªÀ» »ç¿ëÇÔ ¼ö ÀÖ´Ù

Hyun Myung Electronics Co., Ltd.
+82-2-3141-0147
hmkor@hmelec.co.kr

Project: CONFIG
Sheet: Config4
Date: 10/03/98